EF-series

Submersible Sewage Pumps

EVERGUSH®

50HZ

Features

- Non-clogging impeller minimizes abrasives wear and allows large solid passage.
- Dry motor with overload protector; Cable with an epoxy resin sealed water-proof cable hood; Use deep groove C3 bearing to extend life time.
- Superior abrasion resistant double mechanical seal to ensure best seal effect.
- Oil seal mounted outside of seal chamber stops solids gathering around seal faces.

Applications

- Waste water drainage from all industries.
- Sewage drainage from hotels, restaurants, schools, malls, and public facilities.
- Fishery, animal husbandry, stock farm, piggery, fecal sewage tank in waste water treatment plant.
- Drainage of waste water containing fibrous additives from leather factory, dyeing factory and food processing factory.

Motor Spec.

- 2P dry or oil type motor.
- Insulation: F class.
- Protection: IP68.
- Frequency: 50HZ
- Voltage: 1⌀220~240V(0.5~2HP)
  3⌀220~660V(all models)

EF Non-clogging Vortex Impeller

Optional
Sub. pump with guide rail device is available.

Optional Single phase sump pump with auto float switch. (0.5~2HP)

Parts and Materials List

No.	Parts	Std. Material EF Model
1	Cable	STOW or VCT
2	Cable hood	PVC
3	Handle	Nylon6 or SS400
4	Motor cover	Nylon66 or FC200
5	Seal housing	FC200
6	Bracket	FC200
7	Oil chamber	FC200
8	Pump casing	FC200
9	Impeller	FC200
10	Nut	SUS304
11	Mech. seal	CA/CE
12	Oil seal	NBR
13	Bearing	(NTN brand)
14	Overload protector	(T.I.brand)
15	Shaft	SUS410
16	Motor housing	SUS304
17	Lubricant oil	(Turbine Oil ISO VG46)

- Mech.seal (sic/sic)material is optional upon request.

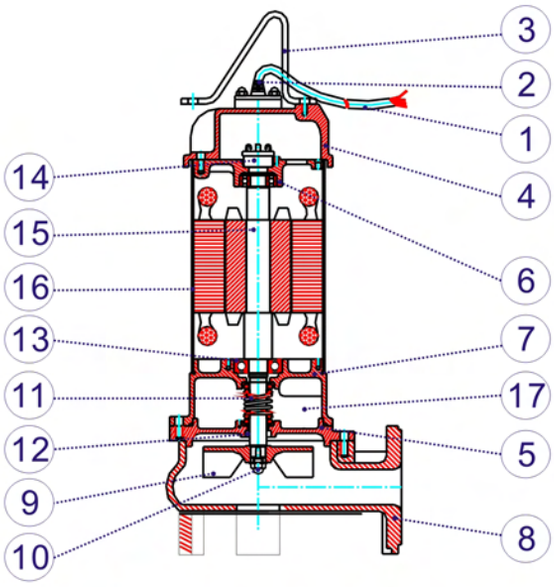

Copyright © EVERGUSH. All rights reserved.

Submersible Sewage Pumps

EVERGUSH®

50HZ

Operating Conditions

- Water temperature: 0~40°C.
- Ambient temperature: 0~40°C.
- Solid passage: 35~50MM.
- Operating water depth: 8~10M.
- No use in sea water.
- No 24hrs continuously running.

Model Code

EF-20(A)(T)

- (T): Three Phase Motor
- (A): Equipped with auto float switch
- 20: HP: Number/10
- EF: Model name of sub. sewage pump

Performance Curves

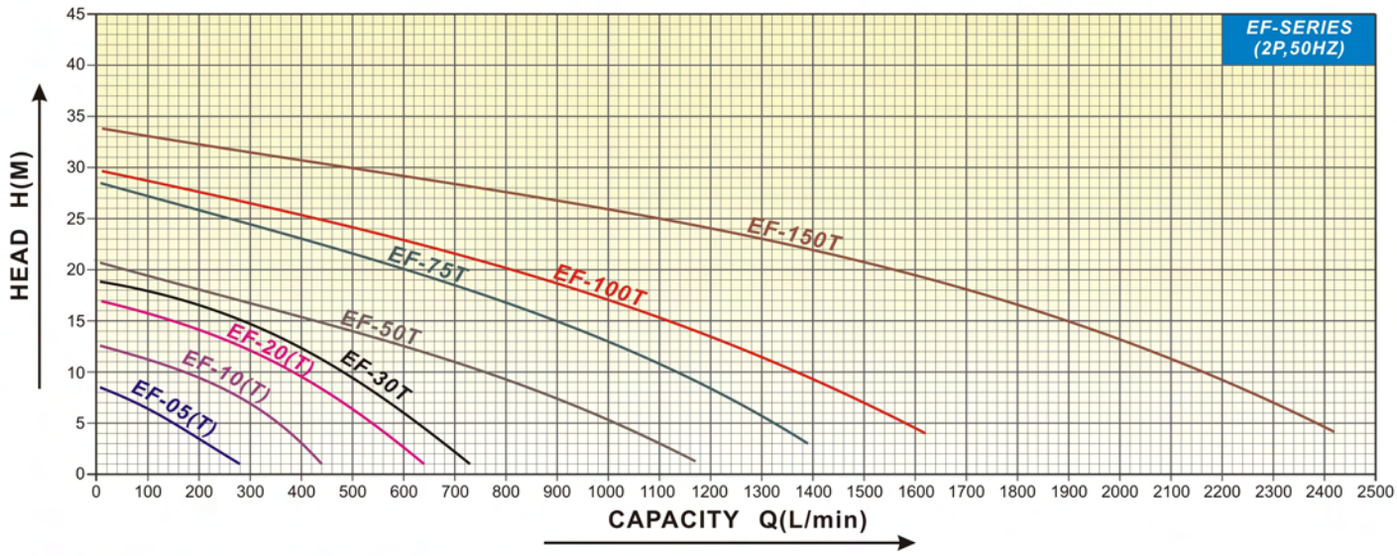

Specification & Dimensions

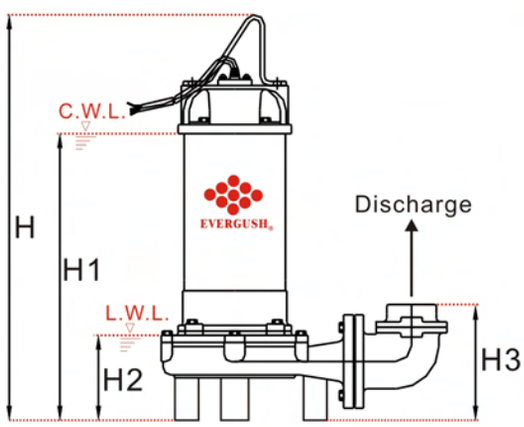

NOTE: Forbid running submersible pumps continously under L.W.L.

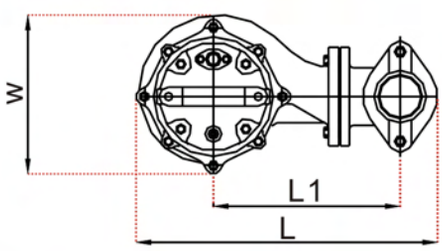

C.W.L.: Continously Running Water Level.
L.W.L.: Lowest Running Water Level.

Model	Type	Power		Disch.	Phase	Rated		Max.		Dimensions (mm)							Cable	Net Weight	Solid Passage
						Head	Capacity	Head	Cap.										
		KW	HP	Inch	φ	M	LPM	M	LPM	L	L1	W	H	H1	H2	H3	M	KG	MM
EF-05(A)(T)	Direct	0.37	0.5	2"	1,3	4~5	180~150	8.5	300	222	115	145	410	297	113	133	5	13	35
EF-10(A)(T)	Direct	0.75	1	2"	1,3	8~9	260~220	12.5	460	222	115	149	464	340	113	133	5	18	35
EF-20(A)(T)	Direct	1.5	2	2"(3")	1,3	9~10	420~380	17	650	387	234	208	548	400	122	153	5	33	35
	Elbow									316	163	208	548	400	122	153	5	30	35
EF-30T	Direct	2.2	3	2"(3")	3	10~11	480~450	19	750	387	234	208	568	420	122	153	5	35	35
	Elbow									316	163	208	568	420	122	153	5	32	35
EF-50T	Elbow	3.7	5	3"(4")	3	11~14	700~500	21	1200	459	256	227	638	471	160	220	5	55	50
EF-75T	Elbow	5.5	7.5	3"(4")	3	13~15	1000~900	28.5	1450	459	256	227	678	511	160	220	5	61	50
EF-100T	Elbow	7.5	10	4"	3	15~17	1120~1000	30	1700	550	280	310	680	511	210	250	5	87	50
EF-150T	Elbow	11	15	4"	3	15~18	1900~1700	34	2500	560	310	310	730	580	250	310	10	110	50

Remarks: ●(A): Equipped with automatic float switch. ●(T): Three phase motor. ●10M cable are available for 0.5~10HP models per special request.

Copyright©EVERGUSH. All rights reserved.

TOS-EF

EF Submersible Sewage Pump with Guide Rail Device

EVERGUSH®

50HZ

Product Features:

- Through simple and convenient installation, we can connect the pump onto guide rail device. Whenever the pump needs maintenance, it can be easily pulled out through guide bar to dismantle, repair or examine the pump. For safety purpose, The workers no longer need to go down the septic tank to do maintenance. It will greatly reduce down time.

Applications:

- Animal husbandry and dairying septic tank waste water drainage; sewers, apartments, buildings and basements sewage treatment equipment drainage; Dye house, fur and leather industry and steel industry waste water drainage; other waste water treatments drainage.

Installation Diagram:

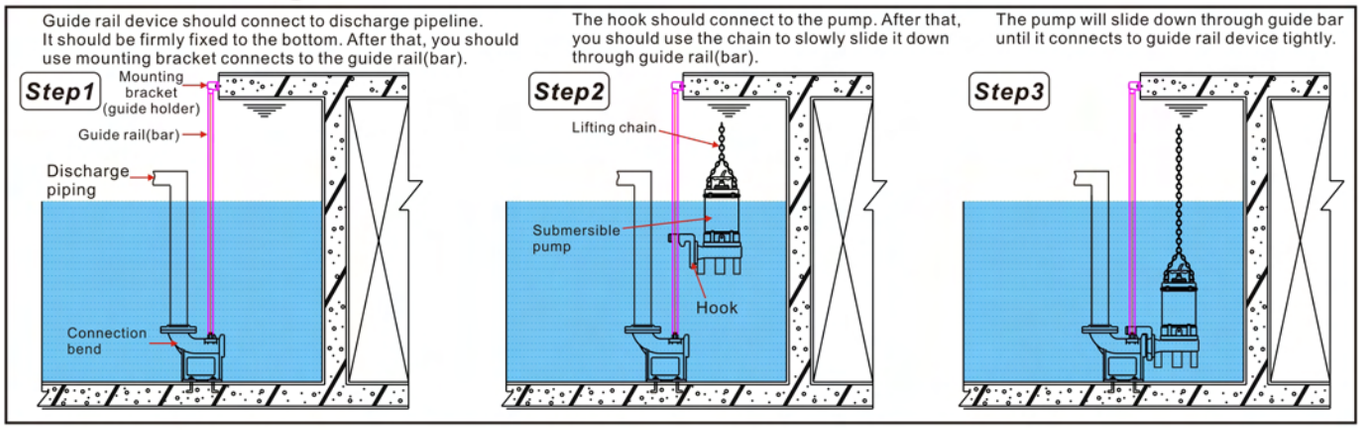

Dimensions:

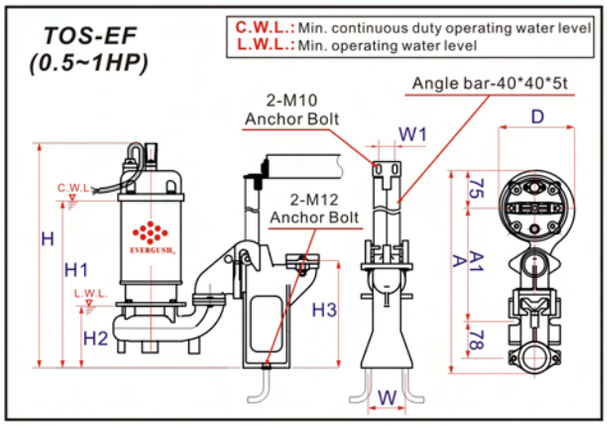

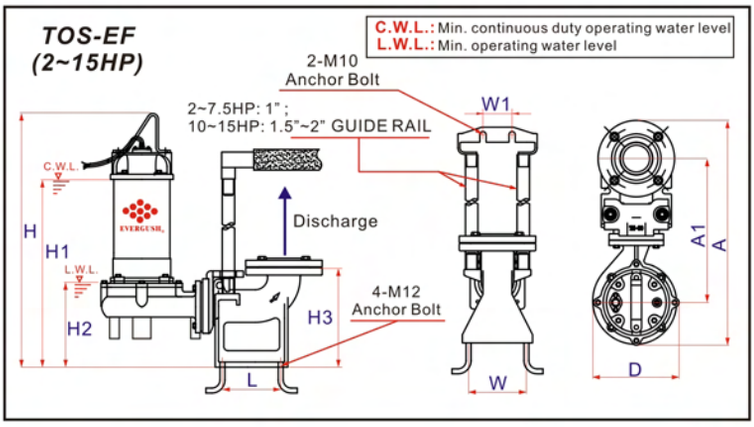

Model	Power	Disch.	Dimensions(mm)										Weight(KG)	
	HP	Inch	A	A1	D	H	H1	H2	H3	L	W	W1	TOS Device	TOS & PUMP
TOS-EF-05(T)	0.5	2"	425	240	150	422	307	150	225	---	80	35	6	19
TOS-EF-10(T)	1	2"	425	240	150	502	377	150	225	---	80	35	6	24
TOS-EF-20(T)	2	3"	545	350	210	650	480	210	243	110	140	70	16	49
TOS-EF-30T	3	3"	545	350	210	670	500	210	243	110	140	70	16	51
TOS-EF-50T	5	4"	725	515	230	745	580	270	310	160	150	70	24	79
TOS-EF-75T	7.5	4"	725	515	230	785	620	270	310	160	150	70	24	85
TOS-EF-100T	10	4"	820	550	290	750	550	280	330	210	125	245	38	125
TOS-EF-150T	15	4"	770	510	310	785	635	305	360	180	125	245	40	150

Remarks: ● TOS means cast iron guide rail device.(Q.D.C:Quick Discharge Device) ●"T" means 3 phase motor.

Copyright © EVERGUSH. All rights reserved.